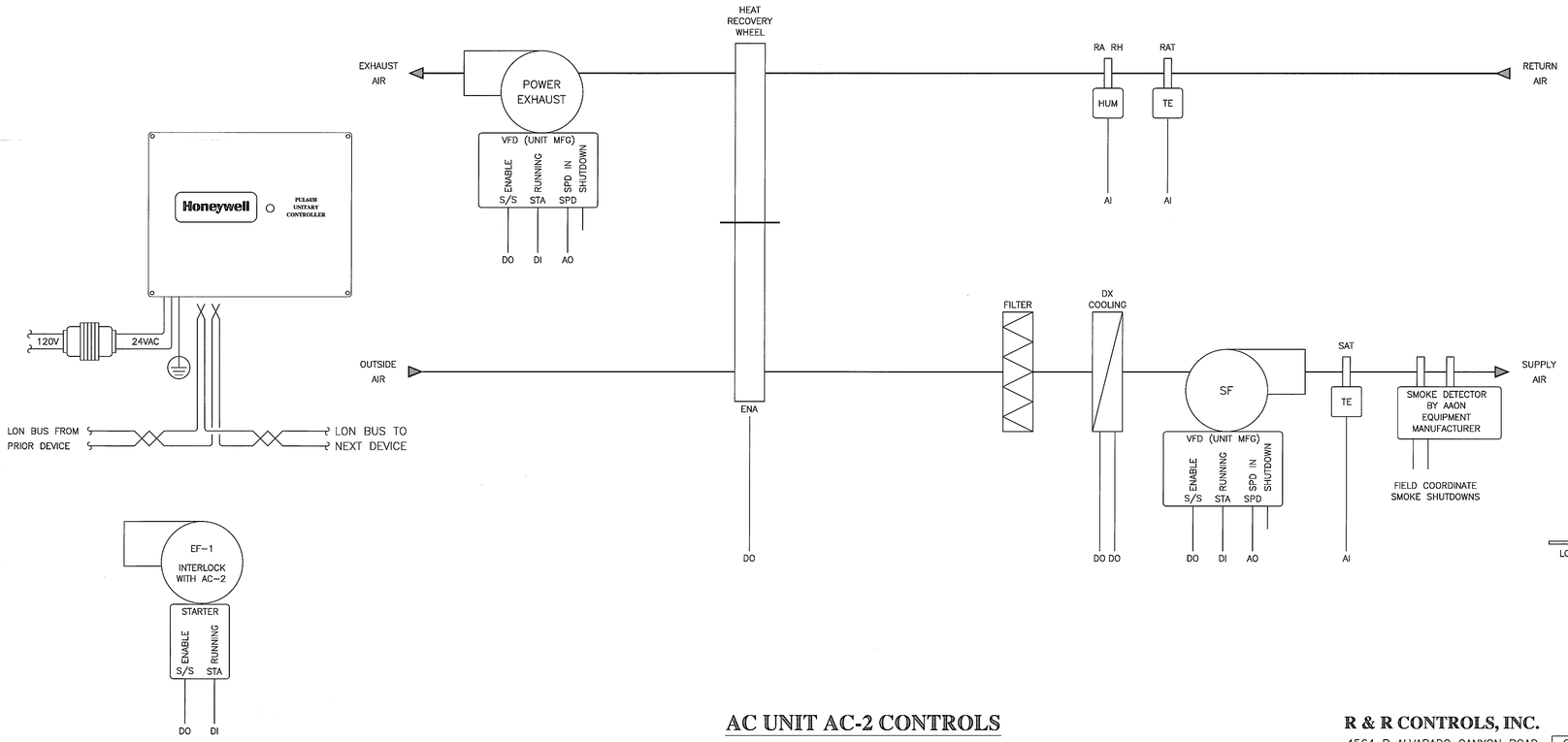

SEQUENCE OF OPERATIONS:
THE AC UNIT WILL BE STARTED AND STOPPED BASED ON A TIME OF DAY SCHEDULE WITH HOLIDAY EXCEPTIONS ENTERED BY THE OWNER.
WHEN RUNNING THE SUPPLY FAN SPEED WILL BE CONTROLLED TO MAINTAIN THE REQUIRED SUPPLY DUCT PRESSURE SETPOINT. THE SETPOINT WILL ADJUST AUTOMATICALLY (WITHIN SETTABLE LIMLIT) BASED ON THE WORST VAV ZONE DAMPER POSITION BEING 95% OPEN. THE EXHAUST FAN SPEED WILL BE CONTROLLED TO MAINTAIN BUILDING PRESSURE AT 0.0"WC TO OUTSIDE.
THE COOLING WILL ADJUST AUTOMATICALLY BASED ON THE VAV ZONE LOADS TO PROVIDE COOLING AS NEEDED. THE HEATING WILL BE PROVIDED BY REHEAT COILS ON THE VAV ZONES.
THE EMS WILL MONITOR VARIOUS SENSORS FOR DISPLAY AND ALARMING PURPOSES.
IF SMOKE IS DETECTED THE SF AND EF WILL BE DISABLED AND ALARMED.

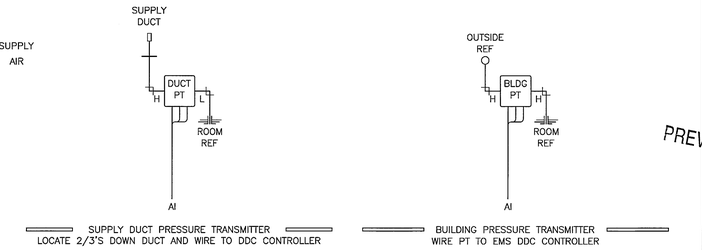

AC UNIT AC-2 CONTROLS

R & R CONTROLS, INC.
4564 B ALVARADO CANYON ROAD
SAN DIEGO, CA. 92120
PHONE: 619-516-1880
FAX: 619-516-1881

PALM SPRINGS ANIMAL CARE FACILITY
ENERGY MANAGEMENT SYSTEM ARCHITECTURE

C			PALM SPRINGS ANIMAL CARE FACILITY
B			4575 E. MESQUITE AVENUE
A			PALM SPRINGS, CALIFORNIA 92262
REVISIONS		DATE	AC UNIT AC-2 CONTROLS
DATE: 12/01/09	SALES:	ENG:	DWG: * OF * DWG. PS_ACF_AC2

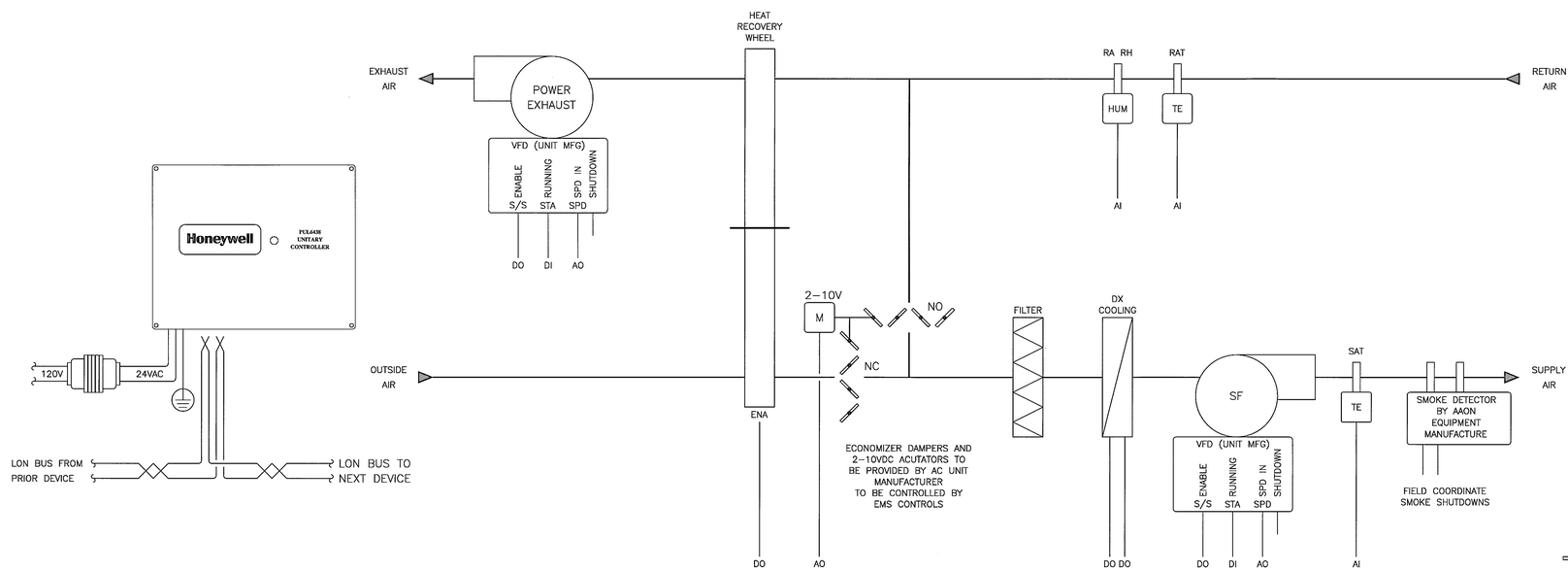

SEQUENCE OF OPERATIONS:
THE AC UNIT WILL BE STARTED AND STOPPED BASED ON A TIME OF DAY SCHEDULE WITH HOLIDAY EXCEPTIONS ENTERED BY THE OWNER.
WHEN RUNNING THE SUPPLY FAN SPEED WILL BE CONTROLLED TO MAINTAIN THE REQUIRED SUPPLY DUCT PRESSURE SETPOINT. THE SETPOINT WILL ADJUST AUTOMATICALLY (WITHIN SETTABLE LIMLIT) BASED ON THE WORST VAV ZONE DAMPER POSITION BEING 95% OPEN. THE EXHAUST FAN SPEED WILL BE CONTROLLED TO MAINTAIN BUILDING PRESSURE AT 0.0"WC TO OUTSIDE.
WHEN THE OUTDOOR AIR CONDITIONS ARE USABLE, THE ECONOMIZERS WILL BE OPENED FIRST BEFORE THE COOLING STAGES ARE TURNED ON. THE COOLING WILL ADJUST AUTOMATICALLY BASED ON THE VAV ZONE LOADS TO PROVIDE COOLING AS NEEDED. THE HEATING WILL BE PROVIDED BY REHEAT COILS ON THE VAV ZONES.
IF THE RETURN AIR CO2 LEVELS EXCEED ACCEPTIBLE LIMITS THE OUTSIDE AIR DAMPERS WILL BE ADJUSTED FURTHER OPEN THE ALLOW MORE FRESH AIR TO ENTER THE BUILDING.
THE EMS WILL MONITOR VARIOUS SENSORS FOR DISPLAY AND ALARMING PURPOSES.
IF SMOKE IS DETECTED THE SF AND EF WILL BE DISABLED AND ALARMED.

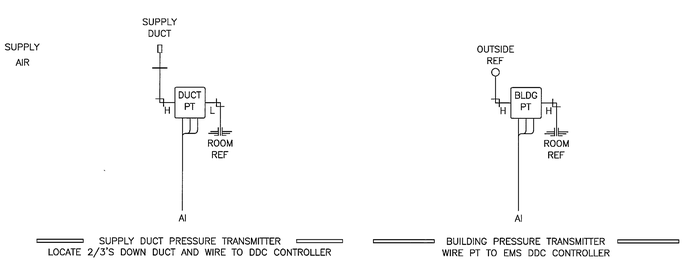

AC UNIT AC-3 CONTROLS

R & R CONTROLS, INC.
4564 B ALVARADO CANYON ROAD
SAN DIEGO, CA. 92120
PHONE: 619-516-1880
FAX: 619-516-1881

PALM SPRINGS ANIMAL CARE FACILITY
ENERGY MANAGEMENT SYSTEM ARCHITECTURE

C			PALM SPRINGS ANIMAL CARE FACILITY
B			4575 E. MESQUITE AVENUE
A			PALM SPRINGS, CALIFORNIA 92262
REVISIONS		DATE	AC UNIT AC-3 CONTROLS
DATE: 12/01/09	SALES:	ENG:	DWG: * OF * DWG. PS_ACF_AC3

SWATT | MIERS ARCHITECTS
5845 Doyle Street, Suite 104
Emeryville, CA 94608
Tel: 510 985 9779
Fax: 510 985 0116
www.swattmiers.com

JAN 19 2010

BID SET

PREVAILING WAGE JOB

MERRICK & ASSOCIATES
MECHANICAL CONSULTING AND ENGINEERING
9606 Tierra Grande Street, Suite 206
San Diego, California 92126
(858) 549-9980
fax. (858) 549-9987

PALM SPRINGS ANIMAL CARE FACILITY
4575 E. MESQUITE AVE.
PALM SPRINGS, CA 92262

CITY OF PALM SPRINGS
PROJECT NO. CP. 07-24

APN: 680-020-010

Issue

Rev	Date	By	Description
1	8/18/09	TH	DD SET
2	10/6/09	BL	PROGRESS SET
3	11/23/09	BL	Bldg. Permit Set
4	01/04/10	BL	Bldg. Permit Re-Submittal
5	01/18/10	BL	Bid Set

NOT FOR CONSTRUCTION

Drawn By	RO
Checked By	DM
Job No.	0903
Issue Date	01/18/10
Scale	1/8"=1'-0"

Reference North

Drawing Title
MECHANICAL CONTROLS

M1.7

Sheet

These plans, drawings and specifications are the property of Swatt | Miers Architects and may not be used and/or reuse thereof in part or in whole without the written permission of the Architect is prohibited.
Copyright 2009 Swatt | Miers Architects