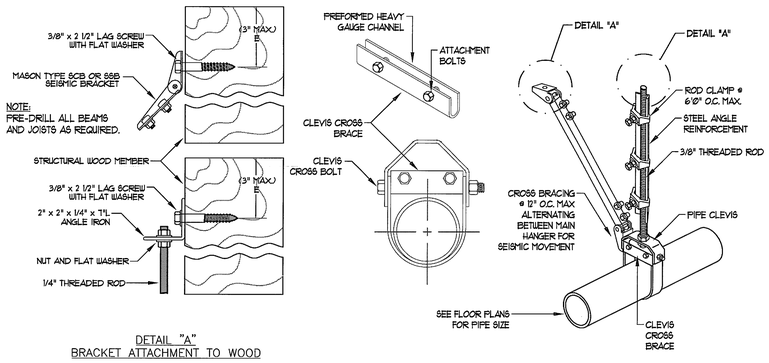

DETAIL "A"
BRACKET ATTACHMENT TO WOOD

PIPING SCHEDULE	
PIPE DIA. (IN.)	WEIGHT (LB/FT.)
1/2"	1.29
3/4"	1.71
1"	2.54
1 1/4"	3.42
1 1/2"	4.11
2"	5.52
2 1/2"	8.78
3"	11.52
4"	16.38
6"	29.01
8"	44.03

HEATING WATER PIPING HANGER ATTACHMENT DETAIL 4

NTS

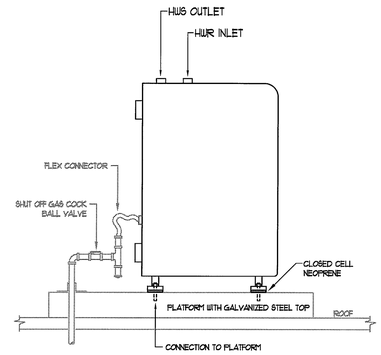

CONDENSING BOILER 3

NTS

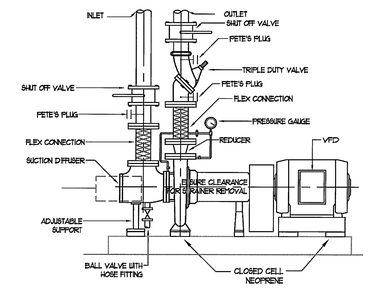

END SUCTION PUMP WITH SUCTION DIFFUSER 2

NTS

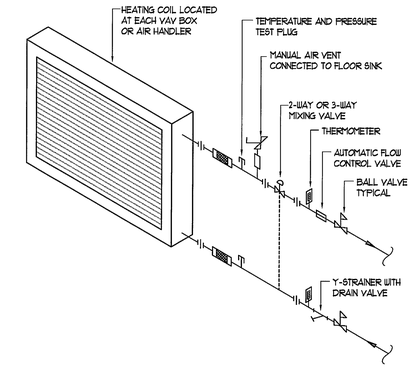

HEATING WATER COIL 1

NTS

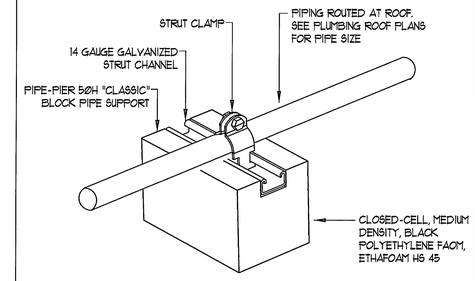

NOTE:
- MAXIMUM SPACING BETWEEN SUPPORT BLOCKS SHALL BE NO GREATER THAN 6'-0".
- ALL PIPING SHALL BE SUPPORTED WITHIN 2'-0" ON BOTH SIDES OF EACH CHANGE IN DIRECTION.

HEATING WATER PIPING SUPPORT ON ROOF 5

NTS

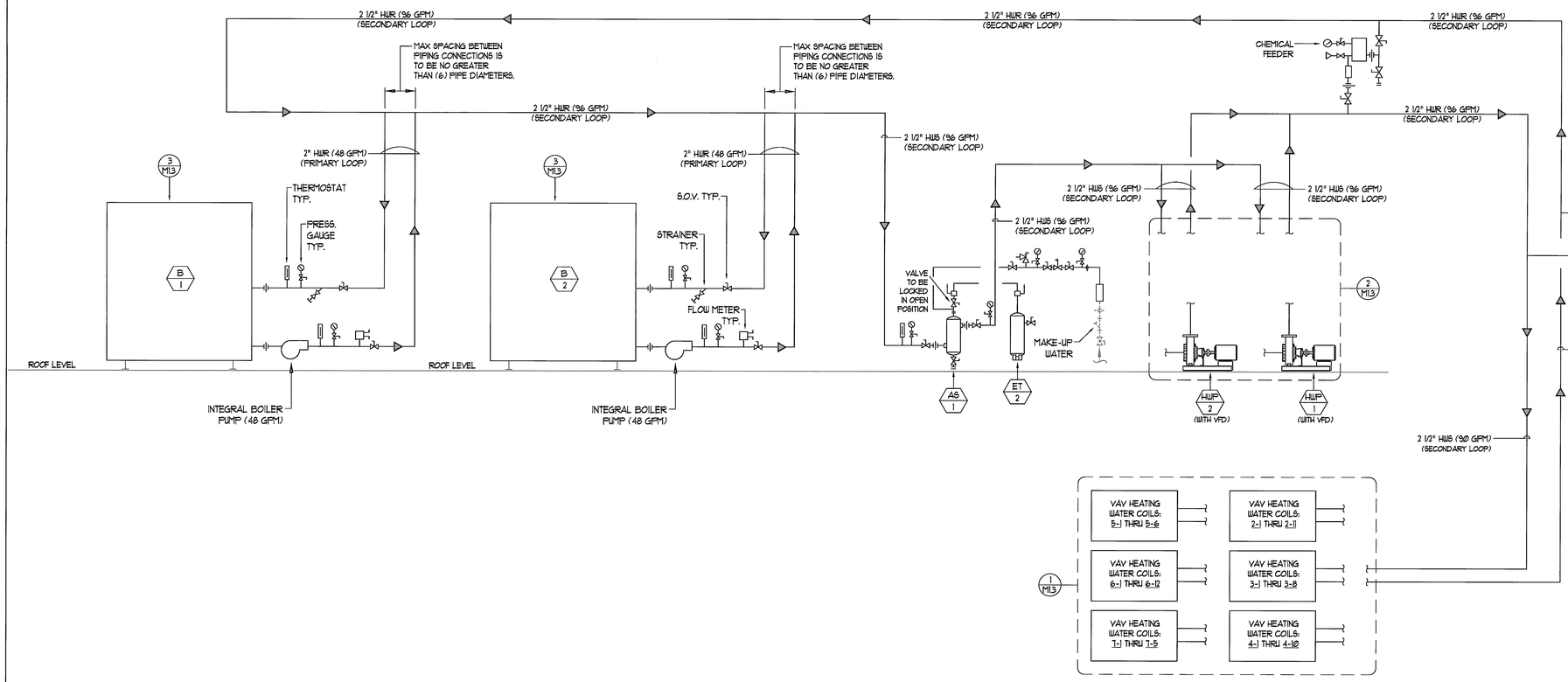

HEATING WATER PIPING SCHEMATIC 6

NTS

MECHANICAL PIPING LEGEND

SYMBOL	DESCRIPTION
	DIRECTION OF FLOW
	PRESSURE GAUGE
	UNION
	3-WAY VLAVE
	SHUT OFF VALVE
	PRESSURE RELIEF VALVE
	AIR VENT
	THERMOMETER
	DRAIN VALVE
	FLOW METER
	SUCTION STRAINER
	CHECK VALVE
	SHUT OFF VALVE
	PRESSURE REDUCING VALVE

ABBREVIATIONS

HWS	HEATING WATER SUPPLY	VAV	VARIABLE AIR VOLUME
HWR	HEATING WATER RETURN	VFD	VARIABLE FREQUENCY DRIVE
GPM	GAL. PER MINUTE		
S.O.V.	SHUTOFF VALVE		

SWATT | MIERS ARCHITECTS

5845 Doyle Street, Suite 104
Emeryville, CA 94608
Tel: 510 985 9779
Fax: 510 985 0116
www.swattmiers.com

JAN 19 2010

BID SET

PREVAILING WAGE JOB

REGISTERED PROFESSIONAL ENGINEER DAVID P. LEDDER No. 22271 EXP. 12/31/11 MECHANICAL STATE OF CALIFORNIA

MERRICK & ASSOCIATES
MECHANICAL CONSULTING AND ENGINEERING
9606 Tierra Grande Street, Suite 206
San Diego, California 92126
(858) 549-9980
fax. (858) 549-9987

PALM SPRINGS ANIMAL CARE FACILITY

4575 E. MESQUITE AVE.
PALM SPRINGS, CA 92262

CITY OF PALM SPRINGS
PROJECT NO. CP. 07-24

APN: 680-020-010

Issue

Rev	Date	By	Description
1	8/18/09	TH	DD SET
2	10/8/09	BL	PROGRESS SET
3	11/23/09	BL	Bldg. Permit Set
4	01/04/10	BL	Bldg. Permit Re-Submittal
5	01/18/10	BL	Bid Set

NOT FOR CONSTRUCTION

Drawn By	RO
Checked By	DM
Job No.	0903
Issue Date	01/18/10
Scale	1/8"=1'-0"

Reference North

Drawing Title

MECHANICAL DETAILS

M1.3

Sheet

These plans, drawings and specifications are the property of Swatt | Miers Architects and any use and/or reuse thereof in part or in whole without the written permission of the Architect is prohibited.
Copyright 2009 Swatt | Miers Architects