NOTES:
1. POWER FOR EXHAUST FANS IS BY DIV 16.
2. LON–BUS COMMUNICATIONS WIRING IS SPECIFIED ON COMMUNICATIONS DRAWING.
3. PROVIDE POWER TO LON SWITCH DEVICE AS REQUIRED.
4. FIELD VERIFY EXHAUST FAN INTERLOCK TERMINATIONS.
5. FIELD VERIFY WALL THERMOSTAT OR SWITCH MOUNTING HEIGHT & LOCATION(S).
6. FIELD VERIFY ROOM SENSOR MOUNTING HEIGHT & LOCATION(S).

SEQUENCE OF OPERATIONS

EMS CONTROLLED EXHAUST FANS: (EF SCHEDULE NOTE 2)
EXHAUST FANS NOTED ON EXHAUST FAN SCHEDULE FOR INTERLOCKING WITH DDC CONTROLS SHALL BE STARTED AND STOPPED FROM THE EMS AND FAN STATUS MONITORED.

ELECTRIC ROOM EXHAUST FAN: (EF SCHEDULE NOTE 4)
ELECTRIC ROOM EXHAUST FAN IS TO BE CONTROLLED BY A LINE VOLTAGE THERMOSTAT.

MANUAL SWITCHED EXHAUST FANS: (EF SCHEDULE NOTE 5)
MISCELLANEOUS EXHAUST FANS ARE CONTROLLED BY MANUAL WALL SWITCHES.

ROOM TEMPERATURE MONITORING: (FC UNIT COOLED ROOMS)
MISCELLANEOUS ROOMS SERVED BY FC UNITS WILL BE MONITORED AND ALARMED BY EMS TEMPERATURE SENSORS.

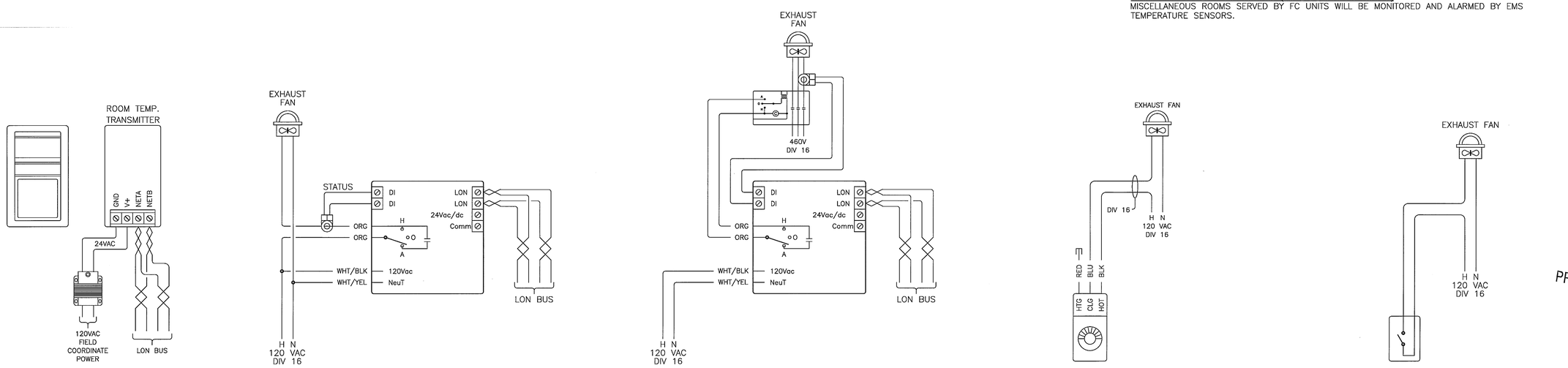

ROOM TEMP SENSOR
FC–1 IT ROOM 309
FC–2 TEL/DATA ROOM 204
PROVIDE 24VAC FROM FC–UNIT

DDC RELAY EF CONTROLS
INSTALL IN ACCESSIBLE LOCATION
REFER TO MECHANICAL EXHAUST SCHEDULE NOTE 2

DDC RELAY EF CONTROLS W/STARTER
INSTALL IN ACCESSIBLE LOCATION
REFER TO MECHANICAL EXHAUST SCHEDULE NOTE 2

LINE VOLTAGE THERMOSTAT
LOCATE PER MECH DRAWINGS

MANUAL SWITCHED EXHAUSTS
LOCATE PER MECH DRAWINGS
REFER TO MECH EXHAUST SCHEDULE NOTE 4

ROOM TEMPERATURE MONITORING AND EXHAUST FAN CONTROLS

(SEE MECHANICAL SCHEDULES)

R & R CONTROLS, INC.
4564 B ALVARADO CANYON ROAD
SAN DIEGO, CA. 92120
PHONE: 619–516–1880
FAX: 619–516–1881

PALM SPRINGS ANIMAL CARE FACILITY
ENERGY MANAGEMENT SYSTEM ARCHITECTURE

C			PALM SPRINGS ANIMAL CARE FACILITY
B			4575 E. MESQUITE AVENUE
A			PALM SPRINGS, CALIFORNIA 92262
REVISIONS		DATE	ROOM TEMP MONITORING & EF CONTROLS
DATE: 12/01/09	SALES: ENG:	DWG: * OF *	DWG. PS_ACF_006

SWATT | MIERS ARCHITECTS
5845 Doyle Street, Suite 104
Emeryville, CA 94608
Tel: 510 985 9779
Fax: 510 985 0116
www.swattmiers.com

JAN 19 2010

BID SET

PREVAILING WAGE JOB

REGISTERED PROFESSIONAL ENGINEER DAVID P. MERRICK No. 22271 EXP. 12/31/11 MECHANICAL STATE OF CALIFORNIA

MERRICK & ASSOCIATES
MECHANICAL CONSULTING AND ENGINEERING
9606 Tierra Grande Street, Suite 206
San Diego, California 92126
(858) 549–9980
fax. (858) 549–9987

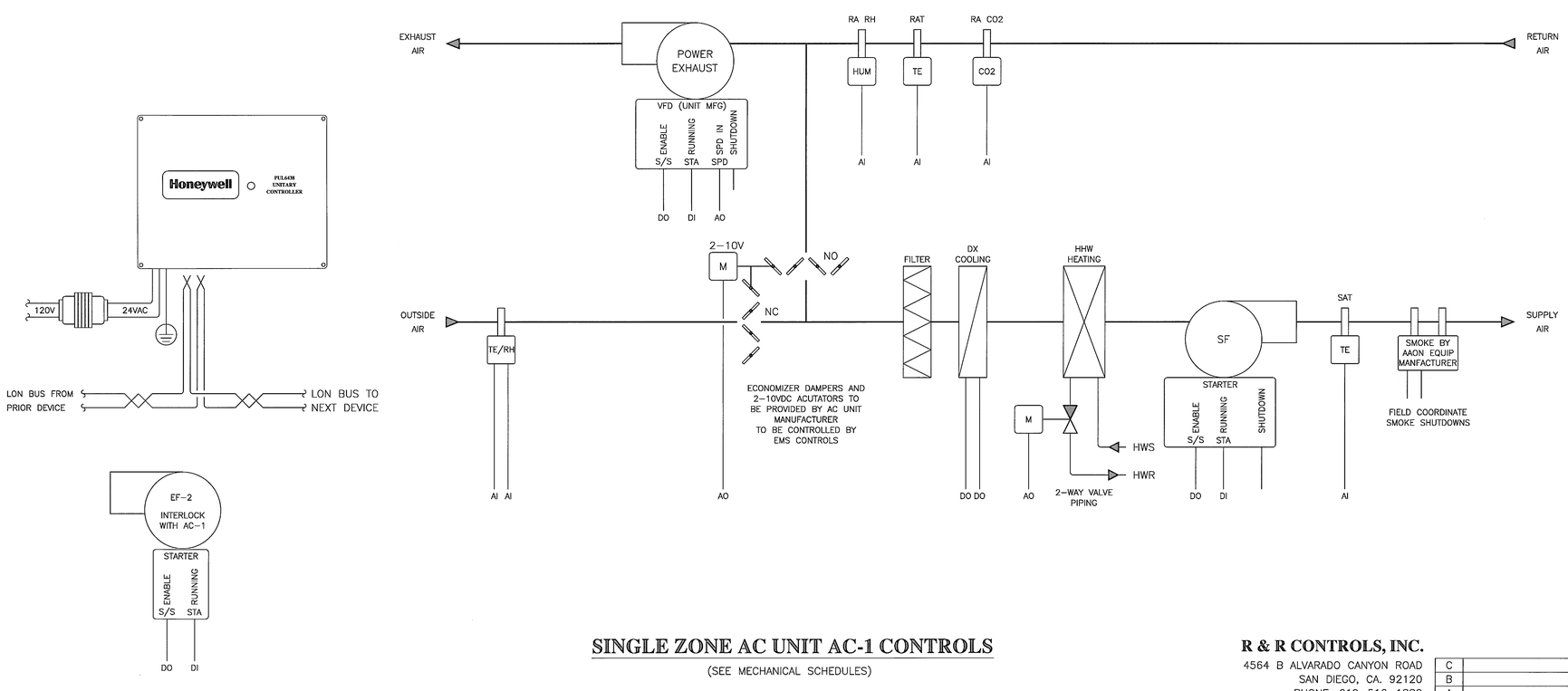

SEQUENCE OF OPERATIONS:
THE AC UNIT WILL BE STARTED AND STOPPED BASED ON A TIME OF DAY SCHEDULE WITH HOLIDAY EXCEPTIONS ENTERED BY THE OWNER.
WHEN RUNNING THE SUPPLY FAN IS A FIXED SPEED. THE POWER EXHAUST FAN ENABLE AND SPEED WILL BE CONTROLLED BY THE DDC CONTROLLER BASED BUILDING PRESSURE.
WHEN THE OUTDOOR AIR CONDITIONS ARE USABLE, THE ECONOMIZERS WILL BE OPENED FIRST BEFORE THE COOLING STAGES ARE TURNED ON. THE COOLING WILL ADJUST AUTOMATICALLY BASED ON THE VAV ZONE LOADS TO PROVIDE COOLING AS NEEDED. THE HEATING WILL BE PROVIDED BY A HEATING COIL ON THE AC UNIT. IF THE RETURN AIR CO2 LEVELS EXCEED ACCEPTIBLE LIMITS THE OUTSIDE AIR DAMPERS WILL BE ADJUSTED FURTHER OPEN THE ALLOW MORE FRESH AIR TO ENTER THE BUILDING.
THE EMS WILL MONITOR VARIOUS SENSORS FOR DISPLAY AND ALARMING PURPOSES.
IF SMOKE IS DETECTED THE SF AND EF WILL BE DISABLED AND ALARMED.

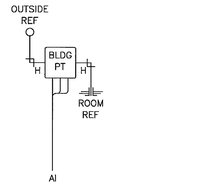

BUILDING PRESSURE TRANS.
PT WIRES TO EMS DDC CONTROLLER
POWER EXHAUST FAN WILL BE CONTROLLED
TO MAINTAIN BUILDING PRESSURE

SINGLE ZONE AC UNIT AC-1 CONTROLS

(SEE MECHANICAL SCHEDULES)

R & R CONTROLS, INC.
4564 B ALVARADO CANYON ROAD
SAN DIEGO, CA. 92120
PHONE: 619–516–1880
FAX: 619–516–1881

PALM SPRINGS ANIMAL CARE FACILITY
ENERGY MANAGEMENT SYSTEM ARCHITECTURE

C			PALM SPRINGS ANIMAL CARE FACILITY
B			4575 E. MESQUITE AVENUE
A			PALM SPRINGS, CALIFORNIA 92262
REVISIONS		DATE	SINGLEZONE AC UNIT AC–1 CONTROLS
DATE: 12/01/09	SALES: ENG:	DWG: * OF *	DWG. PS_ACF_AC1

PALM SPRINGS ANIMAL CARE FACILITY
4575 E. MESQUITE AVE.
PALM SPRINGS, CA 92262

CITY OF PALM SPRINGS
PROJECT NO. CP. 07–24

APN: 680–020–010

Issue

Rev	Date	By	Description
1	8/18/09	TH	DD SET
2	10/8/09	BL	PROGRESS SET
3	11/23/09	BL	Bldg. Permit Set
4	01/04/10	BL	Bldg. Permit Re–Submittal
5	01/18/10	BL	Bid Set

NOT FOR CONSTRUCTION

Drawn By	RO
Checked By	DM
Job No.	0903
Issue Date	01/18/10
Scale	1/8"=1'–0"

Reference North

Drawing Title

MECHANICAL CONTROLS

M1.6

Sheet

These plans, drawings and specifications are the property of Swatt | Miers Architects and any use and/or reuse thereof in part or in whole without the written permission of the Architect is prohibited.
Copyright 2009 Swatt | Miers Architects