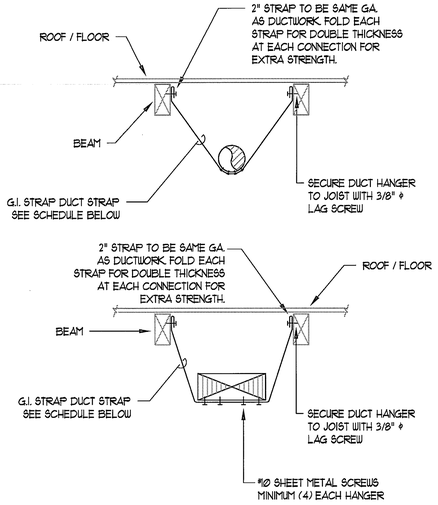

NOTE:
PRE-DRILL ALL BEAMS AND JOISTS AS REQUIRED.

GENERAL NOTE:

A. SUPPORT FOR RECTANGULAR AND ROUND, HORIZONTAL/VERTICAL DUCTWORK SHALL BE INSTALLED PER CMC 2007 SECTION 604.

B. SEISMIC SUPPORT FOR ALL DUCTWORK AND EQUIPMENT SHALL CONFORM TO "GUIDELINES FOR SEISMIC RESTRAINTS OF MECHANICAL SYSTEMS AND PLUMBING PIPING SYSTEMS" AS PREPARED BY "SMACNA" AND "PPIC."

DUCT HANGER STRAP 9

NTS

NTS 4

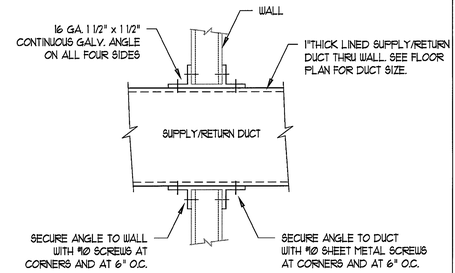

NOTES:
LINED DUCT SHALL HAVE A CLASS 1 FIRE RATING. LINED DUCT SHALL HAVE A FLAME SPREAD RATING OF NOT MORE THAN 25 AND A SMOKE-DEVELOPED RATING OF NOT MORE THAN 50 WHEN TESTED AS A COMPOSITE ASSEMBLY, INCLUDING TAPES AND ADHESIVES AS NORMALLY APPLIED.

DUCT THROUGH WALL 3

NTS

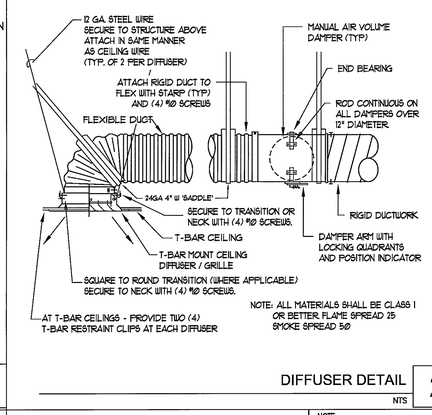

DIFFUSER DETAIL 2

NTS

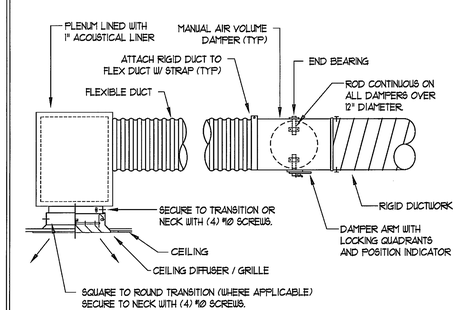

NOTE: THIS DETAIL FOR AREAS WITH LIMITED CEILING CLEARANCES.

DIFFUSER WITH PLENUM DETAIL 1

NTS

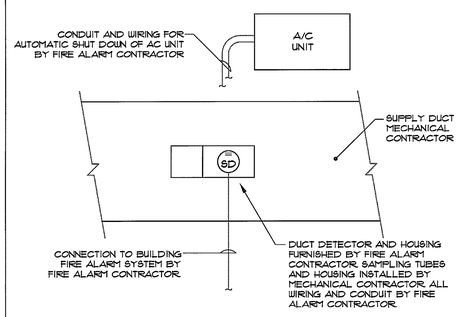

SUPPLY-DUCT SMOKE DETECTOR WIRING DIAGRAM 8

NTS

NTS 7

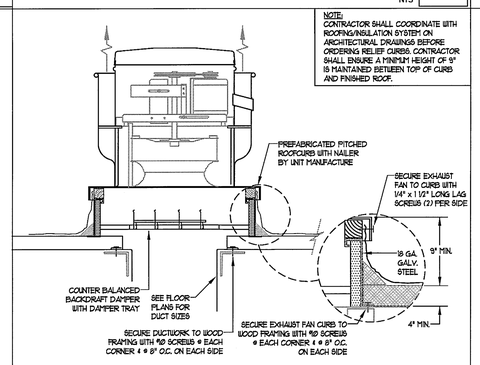

ROOF MOUNTED EXHAUST FAN ON CURB 6

NTS

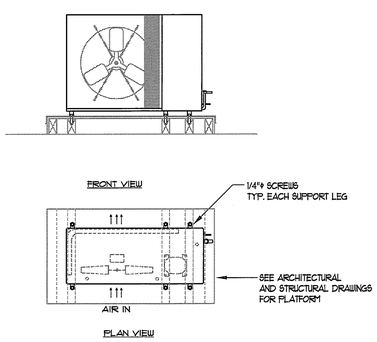

CONDENSING UNIT ROOF PLATFORM 5

NTS

SWATT | MIERS ARCHITECTS

5845 Doyle Street, Suite 104
Emeryville, CA 94608
Tel: 510 985 9779
Fax: 510 985 0116
www.swattmiers.com

JAN 19 2010

BID SET

PREVAILING WAGE JOB

REGISTERED PROFESSIONAL ENGINEER DAVID P. GERBER No. 22271 EXP. 12/31/11 MECHANICAL STATE OF CALIFORNIA

MERRICK & ASSOCIATES
MECHANICAL CONSULTING AND ENGINEERING
9606 Tierra Grande Street, Suite 206
San Diego, California 92126
(858) 549-9980
fax. (858) 549-9987

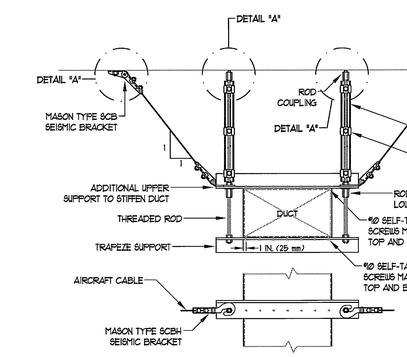

TRANSVERSE SEISMIC CABLE BRACE FOR RECTANGULAR/OVAL DUCT

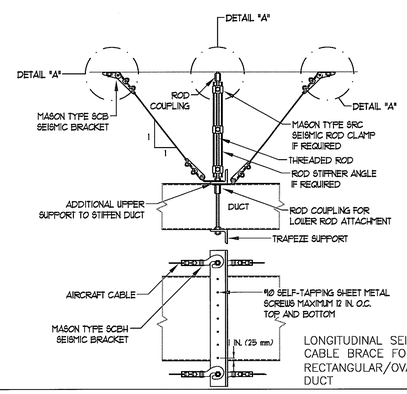

LONGITUDINAL SEISMIC CABLE BRACE FOR RECTANGULAR/OVAL DUCT

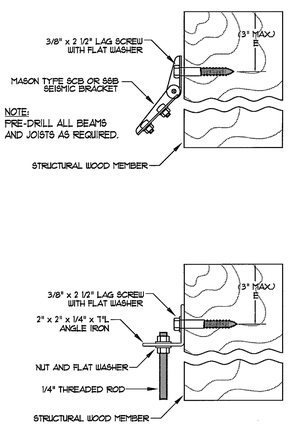

DETAIL "A"
BRACKET ATTACHMENT TO WOOD

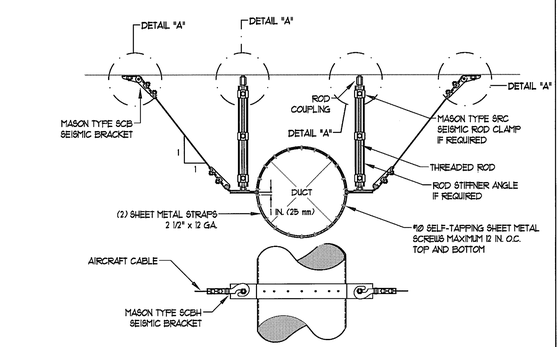

TRANSVERSE SEISMIC CABLE BRACE FOR ROUND DUCT

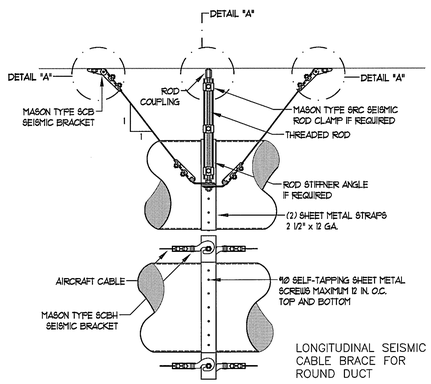

LONGITUDINAL SEISMIC CABLE BRACE FOR ROUND DUCT

SEISMIC DUCT HANGER DETAIL 11

NTS

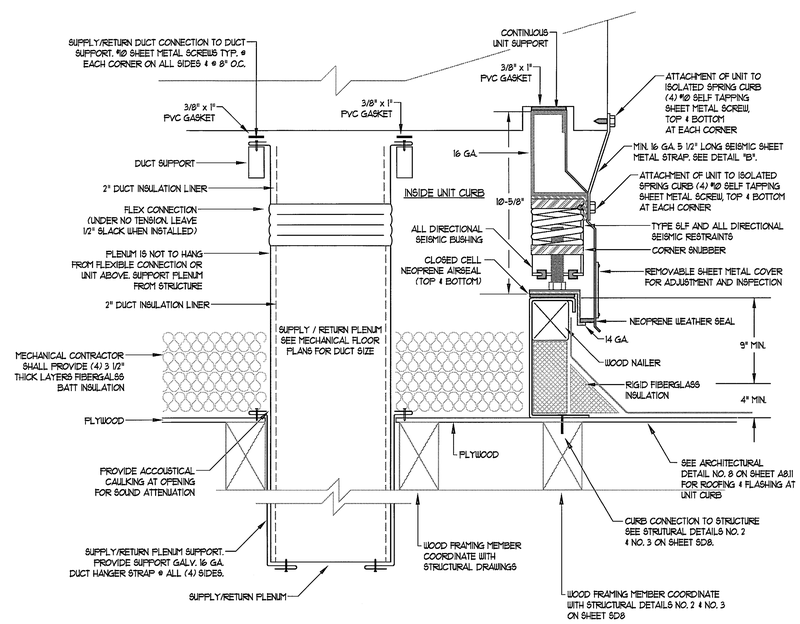

PITCHED ROOF CURB AND VIBRATON ISOLATION FOR ROOF TOP HVAC EQUIPMENT 10

NTS

PALM SPRINGS ANIMAL CARE FACILITY

4575 E. MESQUITE AVE.
PALM SPRINGS, CA 92262

CITY OF PALM SPRINGS
PROJECT NO. CP. 07-24

APN: 680-020-010

Issue

Rev	Date	By	Description
1	8/18/09	TH	DD SET
2	10/8/09	BL	PROGRESS SET
3	11/23/09	BL	Bldg. Permit Set
4	01/04/10	BL	Bldg. Permit Re-Submittal
5	01/18/10	BL	Bid Set

NOT FOR CONSTRUCTION

Drawn By	RO
Checked By	DM
Job No.	0903
Issue Date	01/18/10
Scale	1/8"=1'-0"

Reference North

Drawing Title

MECHANICAL DETAILS

M1.2

Sheet

These plans, drawings and specifications are the property of Swatt | Miers Architects and may
not be used or reuse thereof in part or in whole without the written permission of the Architect is prohibited.
Copyright 2009 Swatt | Miers Architects